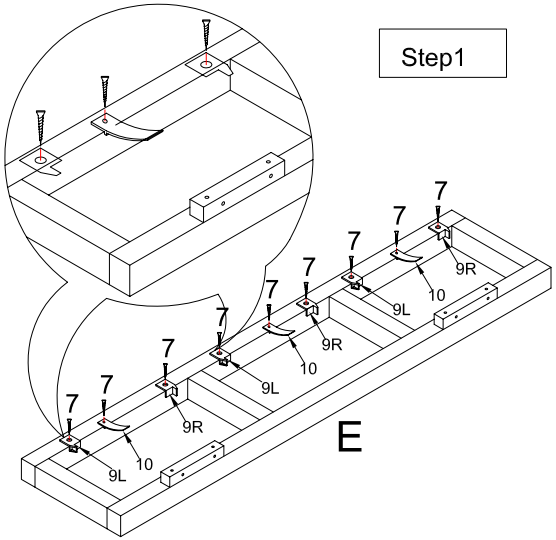

Attach 9L, 10, 9R onto E the Front Apron with 7 the Small Screw

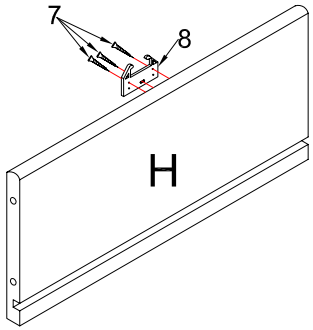

Attach 8 the Plastic Drawer Support onto H the Rear Drawer Panel with 3pcs of 7 the Small Screw

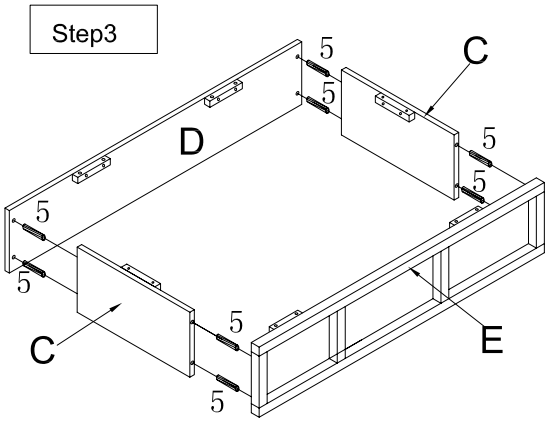

Insert 4pcs of 5 the Wood Dowel into C the Side Storage Apron , then attach two C with D and E.

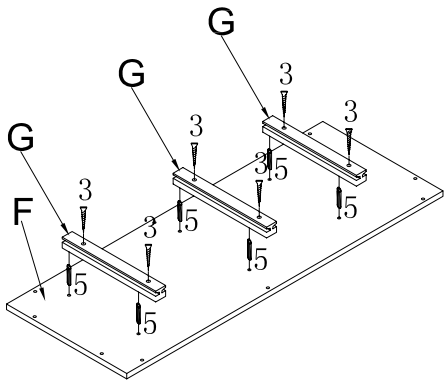

Attact G the Drawer Glider onto F the Seat Storage Panel with 5 the Wood Dowel, insert 3 the Large Screw to fix G and F.

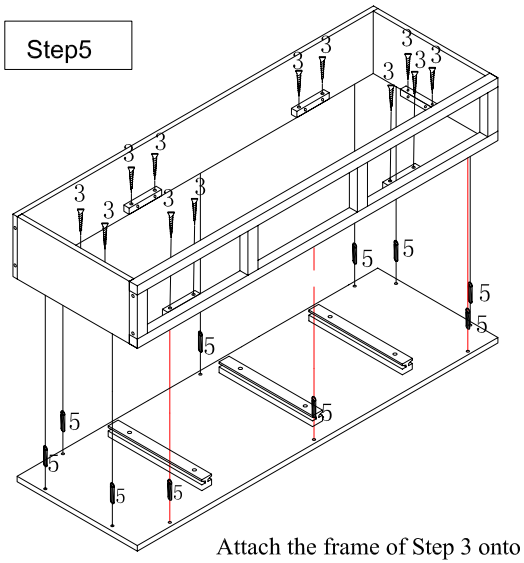

Attach the frame of Step 3 onto F with 5 the Wood Dowel, insert 3 the Large Screw to fix the frame and F.

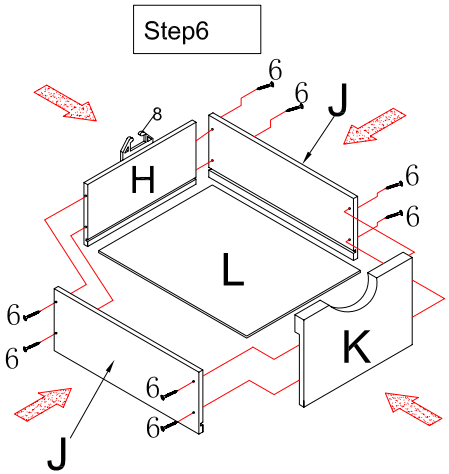

Use 6 the Medium Screw to attach the drawer panel H, J, K, L

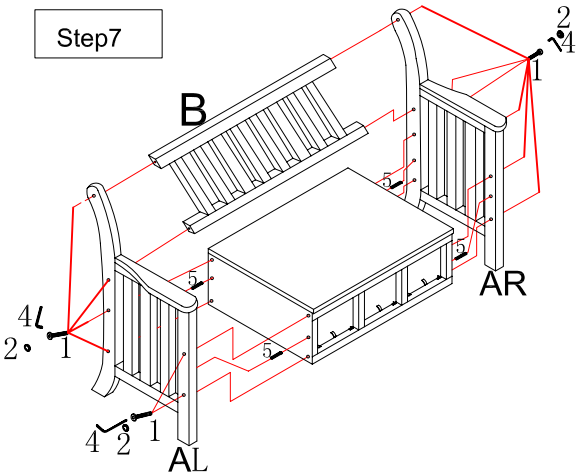

Reverse the seat case of Step 5, attach two Armrest AL, AR with the frame by 5 the Wood Dowel, then attach B the Back Seat Bench Panel with AL and AR by 1 the Machine Screw tighten by 4 the Allen Wrench, finally, fix AL, AR and the frame with 1 and tighten by 4, cover the holes with 2 the Plastic Lid

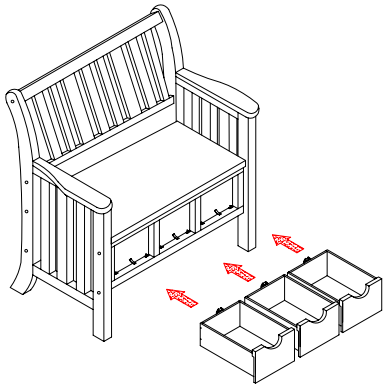

Put the drawers into the seat case